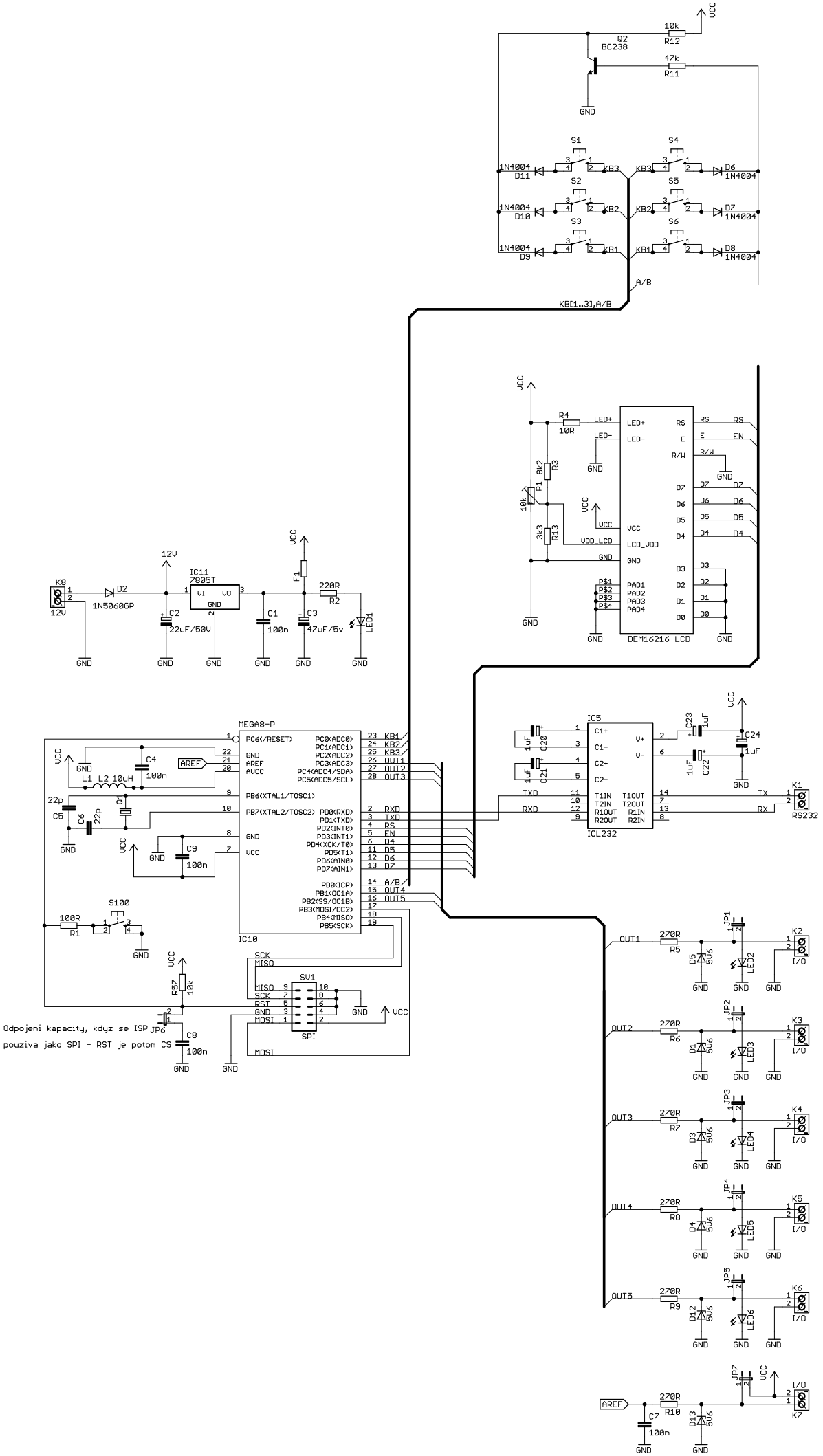
VCC
10k
R12
Q2
BC238
47k
R11
GND
S1
S2
S3
S4
S5
S6
1N4004
D11
D10
D9
D6
D7
D8
KB1
KB2
KB3
A/B
KB[1..3],A/B
R4
10R
LED+
LED-
R3
8k2
P1
10k
R13
3k3
VDD_LCD
LCD_VDD
PAD1
PAD2
PAD3
PAD4
P$1
P$2
P$3
P$4
RS
E
R/W
D7
D6
D5
D4
D3
D2
D1
D0
DEM16216 LCD
K8
12V
D2
1N5060GP
IC11
7805T
VI
VO
C2
22uF/50V
C1
100n
C3
47uF/5v
F1
220R
R2
LED1
MEGA8-P
PC6(/RESET)
GND
AREF
AVCC
PB6(XTAL1/TOSC1)
PB7(XTAL2/TOSC2)
PC0(ADC0)
PC1(ADC1)
PC2(ADC2)
PC3(ADC3)
PC4(ADC4/SDA)
PC5(ADC5/SCL)
PD0(RXD)
PD1(TXD)
PD2(INT0)
PD3(INT1)
PD4(XCK/T0)
PD5(T1)
PD6(AIN0)
PD7(AIN1)
PB0(ICP)
PB1(OC1A)
PB2(SS/OC1B)
PB3(MOSI/OC2)
PB4(MISO)
PB5(SCK)
OUT1
OUT2
OUT3
OUT4
OUT5
IC10
L1 L2 10uH
C4
100n
22p
C5
C6
G1
C9
100n
S100
100R
R1
R57
10k
SCK
MISO
MOSI
SV1
SPI
JP6
C8
100n
Odpojeni kapacity, kdyz se ISP
pouziva jako SPI - RST je potom CS
IC5
C1+
C1-
C2+
C2-
V+
V-
T1IN
T2IN
R1OUT
R2OUT
T1OUT
T2OUT
R1IN
R2IN
ICL232
C20
C21
C22
C23
C24
1uF
TXD
RXD
TX
RX
K1
RS232
JP1
JP2
JP3
JP4
JP5
JP6
JP7
270R
R5
R6
R7
R8
R9
R10
D5
D1
D3
D4
D12
D13
5V6
LED2
LED3
LED4
LED5
LED6
K2
K3
K4
K5
K6
K7
I/O
C7
100n