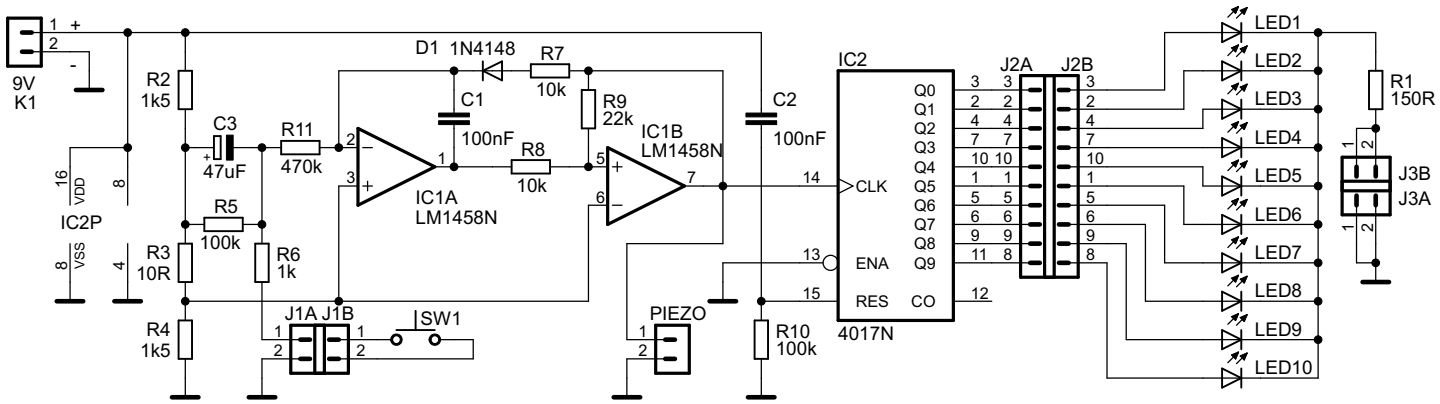

Elektronická ruleta

TITLE: ruleta

Document Number:

REV:

Date: 22.2.2011 7:17:16

Sheet: 1/1